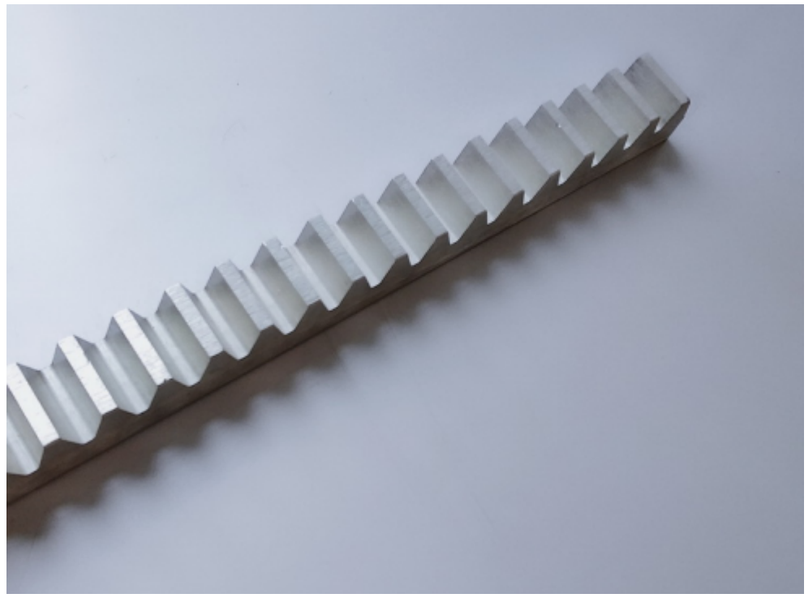

精密设备，高端研发团队，品质保障!

Precision equipment, high-end R & D team, quality assurance!

无可挑剔的智造设备，
精确到丝米的测量单位，
中外研发团队无缝衔接。

Impeccable intellectual equipment.

Accurate to the measuring unit of silk meter.

Chinese and foreign R & D teams seamlessly link up.

INSTRUCTION OF RACK
ASSEMBLY STEPS /齿条装配说明

为了可以更顺利的安装连接用齿条，标准齿条的两端断面将会加工为半齿齿底；以方便跟下一支齿条的端面半齿齿底连接成一个全齿。下图表示为两支齿条如何连接并由齿规可以拥有准确的齿距位置。

关于斜齿齿条相接可以借由反向齿规的配合以便可以精准的连接齿条。

1.而在齿条安装相接时，我们建议先锁上齿条侧面的安装孔，并依照基座上相对应的孔位依序锁上；并借由安装齿规可以很准确的将齿条的齿距位置安装完成。

2.最后再将齿条上的两端侧面的固定销孔给固定上即完成安装。

To assemble connected racks more smoothly, 2 ends of a standard rack would add half tooth which is convenient for next half tooth of next rack to be connected to a complete tooth. the following drawing show how 2 racks connect and tooth gauge can control pitch position accurately.

With regard to connection of helical racks, it can be connected accurately by opposite tooth gauge.

1.When connecting racks, we recommend lock bores on the sides of rack first, and lock bores by the sequence of the foundation. With assembling the tooth gauge, pitch position of racks can be assembled accurately and completely.

2.Last, lock the position pins on 2 sides of rack; the assembly is completed.

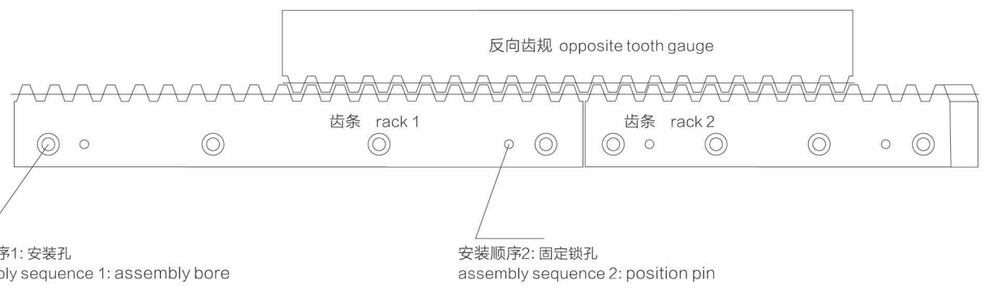

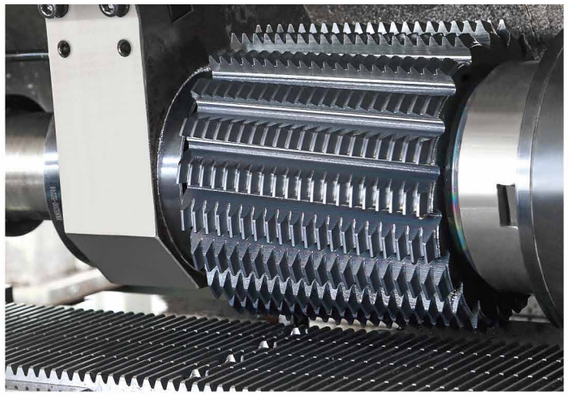

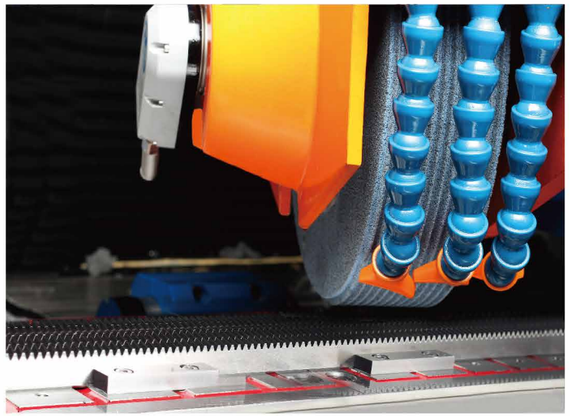

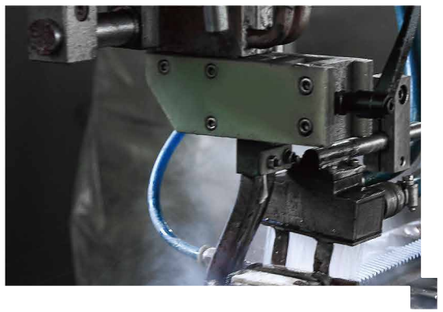

PROVIDING HIGH QUALITY PRODUCTS FC GLOBAL CUS-TOMERS

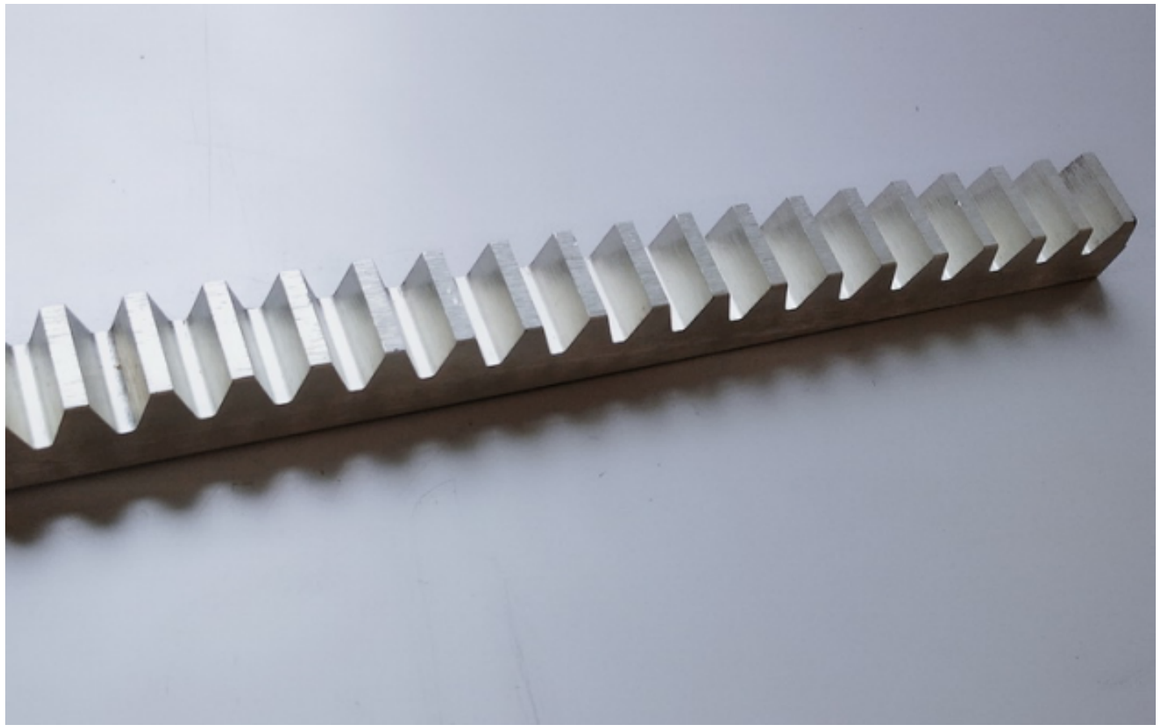

规格参数
规格：24*24*1000
模数：m2
齿数：Z=150
压力角：α=20°
齿顶高系数：ha=1
齿型：斜齿
右旋角：19°31′42″
精度等级：DIN6　国标5级
硬度处理：齿面高频淬火HRC50-55°
生产工艺：四面研磨，齿面研磨

Specification parameter
Specifications: 24*24*1000
Modulus: M2
Tooth number: Z=150
Pressure angle: α=20°
Addendum coefficient: ha=1
Tooth profile: helical teeth
Right angle: 19°31′42″
Accuracy grade: DIN6 GB 5
Hardness treatment: tooth surface high frequency quenching
Production process: four side grinding, tooth surface grinding

Tel: 0086-571-88842852 Fax: 0086-571-88844378 E-mail:oceanindustry@vip.163.com

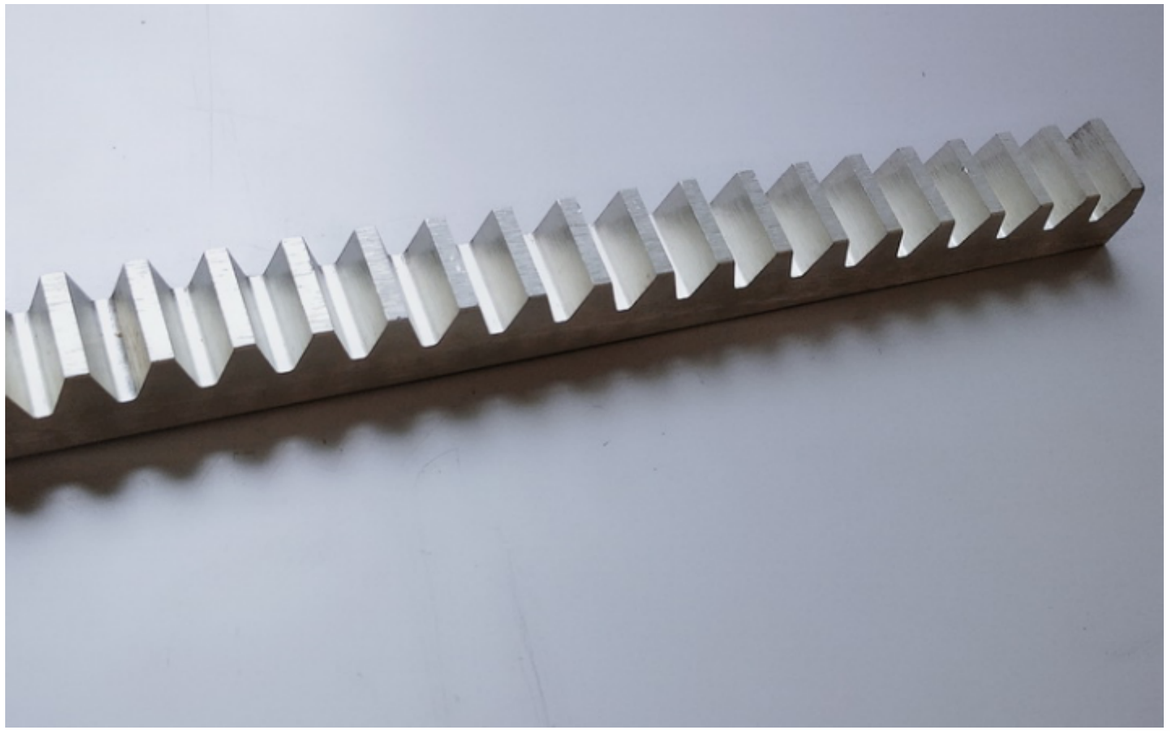

齿条
Racks

齿条传动形式 selection rack and pinion drive

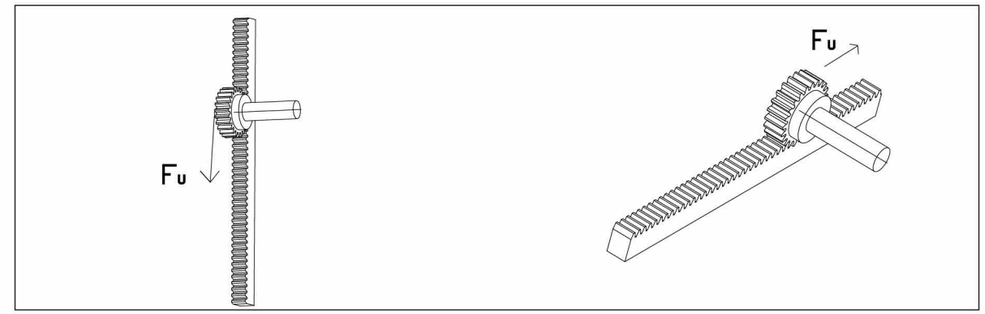

上升/下降 | lift/lower

$Fu = m \cdot g + m \cdot a$

水平 | drive

$Fu = m \cdot g \cdot \mu + m \cdot a$

概括 | general 名称 | description	代号/公式 symbol / formula	单位 dimension
加速度 | acceleration	$a = \frac{v}{t} = \frac{2 \cdot s}{t^2}$	m/s^2
速度 | speed	$a = \frac{s}{t} = \sqrt{2 \cdot a \cdot s}$	m/s
距离 | distance	s	m
时间 | time	t	s
转速 | revolutions per minute,rpm	$n = \frac{v \cdot 60.000}{\pi \cdot d_0}$	1/min
分度圆直径 | pitch diameter	d_0	mm
扭矩 | torque	$M = \frac{F_u \cdot d_0}{2000}$	Nm
功率 | power	$P = \frac{M \cdot n}{9550} = \frac{F_u \cdot n \cdot d_0}{19100}$	KW

规格参数
规格：29*29*1000
模数：m3
齿数：Z=100
压力角：α=20°
齿顶高系数：ha=1
齿型：斜齿
右旋角：19°31′42″
精度等级：DIN6　国标5级
硬度处理：齿面高频淬火HRC50-55°
生产工艺：四面研磨，齿面研磨

Specification parameter
Specifications: 29*29*1000
Modulus: M3
Tooth number: Z=100
Pressure angle: α =20°
Addendum coefficient: ha=1
Tooth profile: helical teeth
Right angle: 19°31′42″
Accuracy grade: DIN6 GB 5
Hardness treatment: tooth surface high frequency quenching HRC50-55°
Production process: four side grinding, tooth surface grinding

第09页至第10页是关于各种齿轮、齿条配合时所能承受的最大允许功率表

On pages 2 and 4 are listed some selection tables for rack/pinion drives for the maximum permissible power.

设计参数

使用系数	1,0
齿间连接安全系数	1,0
防齿裂安全系数	1,4
使用寿命	20.000h

所测得的试验齿条的弯曲疲劳极限σ_{Flim}和试验齿条的接触疲劳极限σ_{Hlim}值如下

The dimensioning happened with

application factor:	1,0
safety for stress at;single tooth contact	1,0
safety for Tooth root stress:	1,4
service life in hours:	20.000h

We calculate with following values for rolling load σ_{Flim} and bending load σ_{Hlim}

材料	σ_{Flim}[N/mm²]	σ_{Hlim}[N/mm²]
C45	440	550
C45 高频淬火 induction hardened	750	1250
16MnCr5 渗碳淬火 Carburisized and hardened	920	1500
42CrMo4V	600	730

Tel: 0086-571-88842852 Fax: 0086-571-88844378 E-mail:oceanindustry@vip.163.com

承载力选择表

selection and load tables

在具有充足的润滑油脂，安全及使用系数1.0，线速度v=1.5m/s的情况下，最大允许扭矩Nm

maximum permissible torques in Nm with adequate lubrication with safety and application factor 1,0;and a speed of 1.5 m/s

模数 | module		1 b=10 mm				1,5 b=15 mm				2 b=20 mm				
齿数 | number of teeth		15	20	25	40	15	20	25	40	15	20	25	30	40
齿条 | rack **材料和齿形** material & tooth system	**圆柱齿轮** | pinion													
C45材料|C45 soft **直齿**|straight	**C45材料** C45 soft	0,3	0,9	1,1	10,7	1,0	2,8	8,8	35,3	4,4	14,1	26,9	44,2	98,2
	C45高频淬火 C45 ind.-hardened	1,2	2,5	4,5	14,7	2,0	5,7	17,7	60,0	13,8	28,1	48,0	74,1	134,7
C45 高频淬火 C45 ind.-hardened **直齿**|straight	**C45高频淬火** C45 ind.-hardened	2,0	8,7	14,7	25,3	7,0	28,2	52,9	95,3	29,8	75,0	128,2	151,7	200,2
C45 高频淬火 C45 ind.-hardened **齿面经磨削 直齿** ground teeth;straight	**C45高频淬火** C45 ind.-hardened													
C45 高频淬火 C45 ind.-hardened **齿面经磨削 斜齿** ground teeth;helical	**C45高频淬火** C45 ind.-hardened													
16MnCr5 渗碳淬火 16MnCr5 case-hardened **齿面经磨削 直齿** ground teeth;straight	**16MnCr5 渗碳淬火** 16MnCr5 case-hardened **齿面经磨削** ground teeth									159,8	200,0	238,2	320,3	
16MnCr5 渗碳淬火 16MnCr5 case-hardened **齿面经磨削 斜齿** ground teeth;helical	**16MnCr5 渗碳淬火** 16MnCr5 case-hardened **齿面经磨削** ground teeth									180,9	227,8	270,2	365,2	
42CrMo4V 调质 42CrMo4V quenched & tempered **直齿** | straight	**16MnCr5 渗碳淬火** 16MnCr5 case-hardened **齿面经磨削** ground teeth									42,8	68,2	100,2	186,7	
42CrMo4V 调质 42CrMo4V quenched & tempered **斜齿** | helical	**16MnCr5 渗碳淬火** 16MnCr5 case-hardened **齿面经磨削** ground teeth									45,9	73,0	104,8	195,1	

承载力选择表

selection and load tables

在具有充足的润滑油脂，安全及使用系数1.0，线速度v=1.5m/s的情况下，最大允许扭矩Nm

maximum permissible torques in Nm with adequate lubrication with safety-and application factor 1,0;and a speed of 1.5 m/s

模数 | module		4 b=40 mm					5 b=50 mm				6 b=60 mm		
齿数 | number of teeth		15	20	25	30	40	15	20	25	40	15	20	25
齿条 | rack **材料和齿形** material & tooth system	**圆柱齿轮** | pinion												
C45材料|C45 soft **直齿**|straight	**C45材料** C45 soft	39,9	115,1	240,2	414,1	850,1	89,8	230,0	489,7	800,4	170,2	429,7	870,4
	C45高频淬火 C45 ind.-hardened	130	249,9	415,2	593,2	1100,4	259,7	499,7	800,4	1200,1	470	810,3	1400,5
C45 高频淬火 C45 ind.-hardened **直齿**|straight	**C45高频淬火** C45 ind.-hardened	220,2	640,1	1070,1	1306,9	1710,4	450	1150,0	1660,4	1999,5	794,6	2200,5	2950,0
C45 高频淬火 C45 ind.-hardened **齿面经磨削 直齿** ground teeth;straight	**C45高频淬火** C45 ind.-hardened						1080		2060,0				3640,0
C45 高频淬火 C45 ind.-hardened **齿面经磨削 斜齿** ground teeth;helical	**C45高频淬火** C45 ind.-hardened						1330					3170,0	4180,0
16MnCr5 渗碳淬火 16MnCr5 case-hardened **齿面经磨削 直齿** ground teeth;straight	**16MnCr5 渗碳淬火** 16MnCr5 case-hardened **齿面经磨削** ground teeth		1070,1	1330,4		2000,3							
16MnCr5 渗碳淬火 16MnCr5 case-hardened **齿面经磨削 斜齿** ground teeth;helical	**16MnCr5 渗碳淬火** 16MnCr5 case-hardened **齿面经磨削** ground teeth	770,1	1219,7	1530,2									
42CrMo4V 调质 42CrMo4V quenched & tempered **直齿** | straight	**16MnCr5 渗碳淬火** 16MnCr5 case-hardened **齿面经磨削** ground teeth		355,2	575,0		1550,4							
42CrMo4V 调质 42CrMo4V quenched & tempered **斜齿** | helical	**16MnCr5 渗碳淬火** 16MnCr5 case-hardened **齿面经磨削** ground teeth	240,8	370,3	589,9									

模数 | module		2,5 b=25 mm				3 b=30 mm				
齿数 | number of teeth		15	20	25	40	15	20	25	30	40
齿条 | rack **材料和齿形** material & tooth system	**圆柱齿轮** | pinion									
C45材料|C45 soft **直齿**|straight	**C45材料** C45 soft	8.5	25,1	52,8	175,2	13	46	97,2	159,6	339,8
	C45高频淬火 C45 ind.-hardened	15.6	45,1	95	145.2	40,8	91,9	168,2	243,4	450,3
C45 高频淬火 C45 ind.-hardened **直齿**|straight	**C45高频淬火** C45 ind.-hardened	60	149,9	255,8	399,7	87,1	215,1	440,0	497,3	780
C45 高频淬火 C45 ind.-hardened **齿面经磨削 直齿** ground teeth;straight	**C45高频淬火** C45 ind.-hardened									
C45 高频淬火 C45 ind.-hardened **齿面经磨削 斜齿** ground teeth;helical	**C45高频淬火** C45 ind.-hardened									
16MnCr5 渗碳淬火 16MnCr5 case-hardened **齿面经磨削 直齿** ground teeth;straight	**16MnCr5 渗碳淬火** 16MnCr5 case-hardened **齿面经磨削** ground teeth					420,1	530,2			880,0
16MnCr5 渗碳淬火 16MnCr5 case-hardened **齿面经磨削 斜齿** ground teeth;helical	**16MnCr5 渗碳淬火** 16MnCr5 case-hardened **齿面经磨削** ground teeth					504,7	605			
42CrMo4V 调质 42CrMo4V quenched & tempered **直齿** | straight	**16MnCr5 渗碳淬火** 16MnCr5 case-hardened **齿面经磨削** ground teeth					138,0	234,8			620,2
42CrMo4V 调质 42CrMo4V quenched & tempered **斜齿** | helical	**16MnCr5 渗碳淬火** 16MnCr5 case-hardened **齿面经磨削** ground teeth					145	245,1			

模数 | module		8 b=80 mm			10 b=100 mm
齿数 | number of teeth		15	20	25	20
齿条 | rack **材料和齿形** material & tooth system	**圆柱齿轮** | pinion				
C45材料|C45 soft **直齿**|straight	**C45材料** C45 soft	420,1	1050,5	2101,0	
	C45高频淬火 C45 ind.-hardened	1149,5	2101,0	3398,0	4000
C45 高频淬火 C45 ind.-hardened **直齿**|straight	**C45高频淬火** C45 ind.-hardened	1898,0	4502,0	7500,0	9900,0
C45 高频淬火 C45 ind.-hardened **齿面经磨削 直齿** ground teeth;straight	**C45高频淬火** C45 ind.-hardened		6870,0		12850,0
C45 高频淬火 C45 ind.-hardened **齿面经磨削 斜齿** ground teeth;helical	**C45高频淬火** C45 ind.-hardened				14000,0
16MnCr5 渗碳淬火 16MnCr5 case-hardened **齿面经磨削 直齿** ground teeth;straight	**16MnCr5 渗碳淬火** 16MnCr5 case-hardened **齿面经磨削** ground teeth				
16MnCr5 渗碳淬火 16MnCr5 case-hardened **齿面经磨削 斜齿** ground teeth;helical	**16MnCr5 渗碳淬火** 16MnCr5 case-hardened **齿面经磨削** ground teeth				
42CrMo4V 调质 42CrMo4V quenched & tempered **直齿** | straight	**16MnCr5 渗碳淬火** 16MnCr5 case-hardened **齿面经磨削** ground teeth				
42CrMo4V 调质 42CrMo4V quenched & tempered **斜齿** | helical	**16MnCr5 渗碳淬火** 16MnCr5 case-hardened **齿面经磨削** ground teeth				

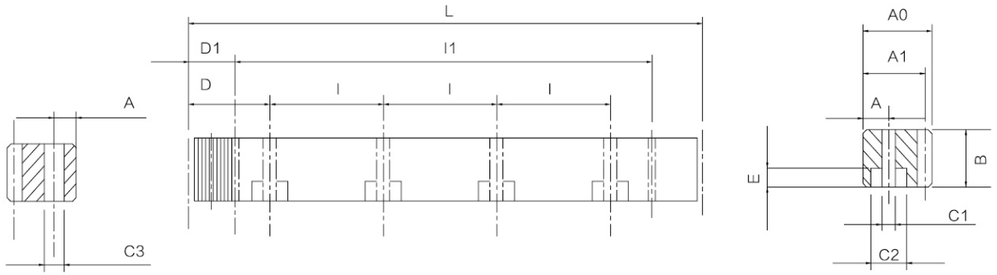

型号 Code			模数 Module	P_t	L	齿数 Tooth No.	B	A0	A1	D	I	孔数 Hole No.	A	C1	C2	E	D1	I1	C3	Fp
551	010	050	1.5	4.7123	499.51	106	17	17	15.5	62.44	124.88	4	7	6	9.5	7	29	441.5	5.7	0.029
551	010	100	1.5	4.7123	999.03	212	17	17	15.5	62.44	124.88	8	7	6	9.5	7	29	941.0	5.7	0.033
551	015	150	1.5	4.7123	499.5	106	19	19	17.5	62.44	124.88	4	8	7	11	7	29	441.5	5.7	0.029
551	015	100	1.5	4.7123	999.03	212	19	19	17.5	62.44	124.88	8	8	7	11	7	29	941	5.7	0.033
551	020	050	2	6.2831	502.65	80	24	24	22	62.83	125.66	4	8	7	11	7	31.3	440.1	5.7	0.029
551	020	100	2	6.2831	1005.31	160	24	24	22	62.83	125.66	8	8	7	11	7	31.3	942.7	5.7	0.034
551	030	050	3	9.4247	508.94	54	29	29	26	63.62	127.23	4	9	10	15	9	34.4	440.1	7.7	0.032
551	030	100	3	9.4247	1017.88	108	29	29	26	63.62	127.23	8	9	10	15	9	34.4	949.1	7.7	0.037
551	040	050	4	12.5666	502.65	40	39	39	35	62.83	125.66	4	12	10	15	9	37.5	427.7	7.7	0.034
551	040	100	4	12.5666	1005.31	80	39	39	35	62.83	125.66	8	12	10	15	9	37.5	930.3	7.7	0.04
551	050	050	5	15.7079	502.65	32	49	39	34	62.83	125.66	4	12	14	20	13	30.1	442.4	11.7	0.034
551	050	100	5	15.7079	1005.31	64	49	39	34	62.83	125.66	8	12	14	20	13	30.1	945	11.7	0.04
551	060	050	6	18.8495	508.94	27	59	49	43	63.62	127.23	4	16	18	26	17	31.4	446.1	15.7	0.034
551	060	100	6	18.8495	1017.88	54	59	49	43	63.62	127.23	8	16	18	26	17	31.4	955.0	15.7	0.04
551	080	050	8	25.1327	502.65	20	79	79	71	62.83	125.66	4	25	22	33	21	26.6	449.5	19.7	0.037
551	080	100	8	25.1327	1005.31	40	79	79	71	62.83	125.66	8	25	22	33	21	26.6	952	19.7	0.043
551	100	050	10	31.4159	1005.31	32	99	99	89	62.83	125.66	8	32	33	48	32	125.67	753.96	19.7	0.043
551	120	100	12	37.6991	1017.88	27	120	120	108	63.6	127.23	8	40	39.0	58	38	127.23	763.4	19.7	0.046

端面齿距Pe=模数×π　Fp=总齿距误差

技术要求
精度等级:DIN6 国际5级
材　　料:S45C/20CrMnTi
齿　　型:直齿
硬度处理:高频淬火 HRC50-55°
生产工艺:硬齿面处理后四面平磨，齿面研磨

Technical requirement
Accuracy level: DIN6 international 5 level.
Material: S45C/20CrMnTi
Tooth type: straight tooth.
Hardness treatment: high frequency quenching HRC50-55°
Production process: four side grinding after hard tooth surface treatment, tooth surface grinding.

亦供应无钻孔的齿条，请于型号后备注"N"，如STOER010N。
不同尺寸与材质以可依照图面客制化。

Racks without holes are also available. Note"N" in the end of code number.I.e. SOTER010N.Other Dimensions / Materials could be customized by drawings.

此样本中的所有产品型号及参数如有变更恕不另行通告，订货前请于本公司联系确认。

The content of this documentis subject to change without notice.Please contact us before ordering.

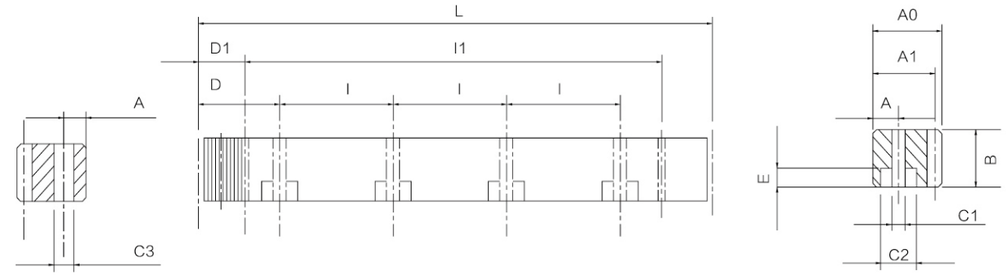

型号 Code			模数 Module	P_t	L	齿数 Tooth No.	B	A0	A1	D	I	孔数 Hole No.	A	C1	C2	E	D1	I1	C3	Fp
661	010	050	1.5	4.7123	499.51	106	17	17	15.5	62.44	124.88	4	7	6	9.5	7	29	441.5	5.7	0.066
661	010	100	1.5	4.7123	999.03	212	17	17	15.5	62.44	124.88	8	7	6	9.5	7	29	941.0	5.7	0.074
661	015	050	1.5	4.7123	499.5	106	19	19	17.5	62.44	124.88	4	8	7	11	7	29	441.5	5.7	0.066
661	015	100	1.5	4.7123	999.03	212	19	19	17.5	62.44	124.88	8	8	7	11	7	29	941.0	5.7	0.074
661	020	050	2	6.2831	502.65	80	25	24	22	62.83	125.66	4	8	7	11	7	31.3	440.1	5.7	0.066
661	020	100	2	6.2831	1005.31	160	25	24	22	62.83	125.66	8	8	7	11	7	31.3	942.7	5.7	0.074
661	030	050	3	9.4247	508.94	54	30	29	26	63.62	127.23	4	9	10	15	9	34.4	440.1	7.7	0.066
661	030	100	3	9.4247	1017.88	108	30	29	26	63.62	127.23	8	9	10	15	9	34.4	949.1	7.7	0.072
661	040	050	4	12.5666	502.65	40	40	39	35	62.83	125.66	4	12	10	15	9	37.5	427.7	7.7	0.072
661	040	100	4	12.5666	1005.31	80	40	39	35	62.83	125.66	8	12	10	15	9	37.5	930.3	7.7	0.078
661	050	050	5	15.7079	502.65	32	49	39	34	62.83	125.66	4	12	14	20	13	30.1	442.4	11.7	0.072
661	050	100	5	15.7079	1005.31	64	49	39	34	62.83	125.66	8	12	14	20	13	30.1	945.0	11.7	0.078
661	060	050	6	18.8495	508.94	27	59	49	43	63.62	127.23	4	16	18	26	17	31.4	446.1	15.7	0.072
661	060	100	6	18.8495	1017.88	54	59	49	43	63.62	127.23	8	16	18	26	17	31.4	955.0	15.7	0.078
661	080	050	8	25.1327	502.65	20	79	79	71	62.83	125.66	4	25	22	33	21	26.6	449.5	19.7	0.08
661	080	100	8	25.1327	1005.31	40	79	79	71	62.83	125.66	8	25	22	33	21	26.6	952	19.7	0.085
661	100	050	10	31.4159	1005.31	32	99	99	89	62.83	125.66	8	32	33	48	32	125.7	753.96	19.7	0.09
661	120	100	12	37.6991	1017.88	27	120	120	108	63.6	127.23	8	40	39	58	38	127.23	763.4	19.7	0.09

端面齿距Pe=模数×π　Fp=总齿距误差

技术要求
精度等级:DIN8 国际7级
材　　料:S45C
齿　　型:直齿
硬度处理:调质处理 HB20-25°
生产工艺:四面平磨精插

Technical requirement
Accuracy level: DIN8 international 7 level.
Material: S45C
Tooth type: straight tooth.
Hardness treatment: quenching and tempering treatment HB20-25°
Production process: four sides flat grinding and fine cutting

亦供应无钻孔的齿条，请于型号后备注"N"，如STOER010N。
不同尺寸与材质以可依照图面客制化。

Racks without holes are also available. Note"N" in the end of code number.I.e. SOTER010N.Other Dimensions / Materials could be customized by drawings.

此样本中的所有产品型号及参数如有变更恕不另行通告，订货前请于本公司联系确认。

The content of this documentis subject to change without notice.Please contact us before ordering.

Tel: 0086-571-88842852 Fax: 0086-571-88844378 E-mail:oceanindustry@vip.163.com

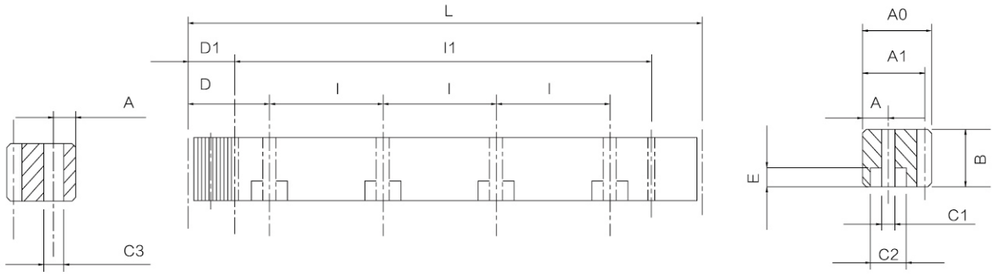

型号 Code			模数 Module	P_t	L	齿数 Tooth No.	B	A0	A1	D	I	孔数 Hole No.	A	C1	C2	E	D1	I1	C3	Fp
771	010	050	1.5	4.7123	499.51	106	17	17	15.5	62.44	124.88	4	7	6	9.5	7	29	441.5	5.7	0.08
771	010	100	1.5	4.7123	999.03	212	17	17	15.5	62.44	124.88	8	7	6	9.5	7	29	941.0	5.7	0.09
771	015	050	1.5	4.7123	499.5	106	19	19	17.5	62.44	124.88	4	8	7	11	7	29	441.5	5.7	0.08
771	015	100	1.5	4.7123	999.03	212	19	19	17.5	62.44	124.88	8	8	7	11	7	29	941.0	5.7	0.09
771	020	050	2	6.2831	502.65	80	24	24	22	62.83	125.66	4	8	7	11	7	31.3	440.1	5.7	0.08
771	020	100	2	6.2831	1005.31	160	24	24	22	62.83	125.66	8	8	7	11	7	31.3	942.7	5.7	0.09
771	030	050	3	9.4247	508.94	54	29	29	26	63.62	127.23	4	9	10	15	9	34.4	440.1	7.7	0.088
771	030	100	3	9.4247	1017.88	108	29	29	26	63.62	127.23	8	9	10	15	9	34.4	949.1	7.7	0.101
771	040	050	4	12.5666	502.65	40	39	39	35	62.83	125.66	4	12	10	15	9	37.5	427.7	7.7	0.095
771	040	100	4	12.5666	1005.31	80	39	39	35	62.83	125.66	8	12	10	15	9	37.5	930.3	7.7	0.109
771	050	050	5	15.7079	502.65	32	49	39	34	62.83	125.66	4	12	14	20	13	30.1	442.4	11.7	0.095
771	050	100	5	15.7079	1005.31	64	49	39	34	62.83	125.66	8	12	14	20	13	30.1	945.0	11.7	0.109
771	060	050	6	18.8495	508.94	27	59	49	43	63.62	127.23	4	16	18	26	17	31.4	446.1	15.7	0.095
771	060	100	6	18.8495	1017.88	54	59	49	43	63.62	127.23	8	16	18	26	17	31.4	955.0	15.7	0.109
771	080	050	8	25.1327	502.65	20	79	79	71	62.83	125.66	4	25	22	33	21	26.6	449.5	19.7	0.1
771	080	100	8	25.1327	1005.31	40	79	79	71	62.83	125.66	8	25	22	33	21	26.6	952	19.7	0.11
771	100	050	10	31.4159	1005.31	32	99	99	89	62.83	125.66	8	32	33	48	32	125.7	753.96	19.7	0.12
771	120	100	12	37.6991	1017.88	27	120	120	108	63.6	127.23	8	40	39	58	38	127.23	763.4	19.7	0.12

端面齿距Pe=模数×π　Fp=总齿距误差

技术要求
精度等级:DIN8 国际7级
材　　料:S45C
齿　　型:直齿
硬度处理:高频淬火 HRC50-55°
生产工艺:四面平磨精插,表面发黑或磷化

亦供应无钻孔的齿条，请于型号后备注"N"，如STOER010N。
不同尺寸与材质以可依照图面客制化。

此样本中的所有产品型号及参数如有变更恕不另行通告，订货前请于本公司联系确认。

Technical requirement
Accuracy level: DIN8 international 7 level.
Material: S45C
Tooth type: straight tooth.
Hardness treatment: high frequency quenching HRC50-55°
Production process: four sides flat grinding, fine insertion, surface blackening or phosphating.

Racks without holes are also available. Note"N" in the end of code number.I.e. SOTER010N.Other Dimensions / Materials could be customized by drawings.

The content of this documentis subject to change without notice.Please contact us before ordering.

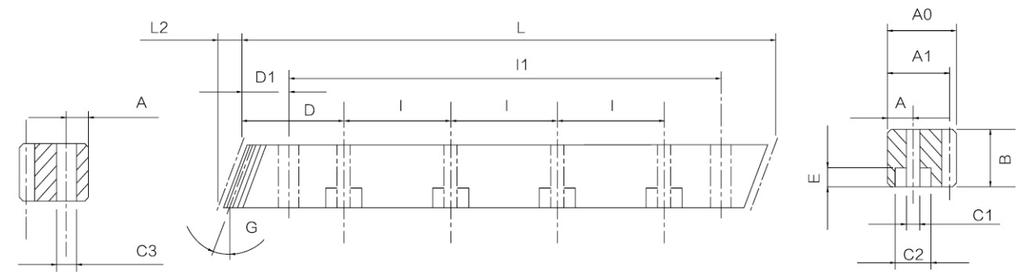

型号 Code			模数 Module	P_t	L	L2	齿数 Tooth No.	B	A0	A1	D	I	孔数 Hole No.	A	C1	C2	E	D1	I1	C3	Fp
552	010	050	1.5	4.9999	500.00	6	100	17	17	15.5	62.5	125	4	7	6	9.5	7	31.7	436.6	5.7	0.029
552	010	100	1.5	4.9999	1000.00	6	200	17	17	15.5	62.5	125	8	7	6	9.5	7	31.7	936.6	5.7	0.033
552	015	150	1.5	4.9999	500.00	6.03	100	19	19	17.5	62.5	125	4	8	7	11	7	31.7	436.6	5.7	0.029
552	015	100	1.5	4.9999	1000.00	6.74	200	19	19	17.5	62.5	125	8	8	7	11	7	31.7	936.6	5.7	0.033
552	020	050	2	6.6666	500.00	8.5	75	24	24	22	62.5	125	4	8	7	11	7	31.7	436.6	5.7	0.029
552	020	100	2	6.6666	1000.00	8.5	150	24	24	22	62.5	125	8	8	7	11	7	31.7	936.6	5.7	0.034
552	030	050	3	9.9999	500.00	10.3	50	29	29	26	62.5	125	4	9	10	15	9	35.0	430.0	7.7	0.032
552	030	100	3	9.9999	1000.00	10.3	100	29	29	26	62.5	125	8	9	10	15	9	35.0	930.0	7.7	0.037
552	040	050	4	13.3333	506.67	13.8	38	39	39	35	62.5	125	4	12	10	15	9	33.3	433.0	7.7	0.034
552	040	100	4	13.3333	1000.00	13.8	75	39	39	35	62.5	125	8	12	10	15	9	33.3	933.4	7.7	0.04
552	050	050	5	16.6666	500.00	17.4	30	49	39	34	62.5	125	4	12	14	20	13	37.5	425.0	11.7	0.034
552	050	100	5	16.6666	1000.00	17.4	60	49	39	34	62.5	125	8	12	14	20	13	37.5	925.0	11.7	0.04
552	060	050	6	19.9999	500.00	20.9	25	59	49	43	62.5	125	4	16	18	26	17	37.5	425.0	15.7	0.034
552	060	100	6	19.9999	1000.00	20.9	50	59	49	43	62.5	125	8	16	18	26	17	37.5	925.0	15.7	0.04
552	080	050	8	26.6667	480.00	28.0	18	79	79	71	60.0	120	4	25	22	33	21	120.0	240.0	19.7	0.037
552	080	100	8	26.6667	960.00	28.0	36	79	79	71	60.0	120	8	25	22	33	21	120.0	720.0	19.7	0.043
552	100	050	10	33.3333	1000.00	35.11	30	99	99	89	62.5	125	8	32	33	48	32	125.0	750.0	19.7	0.043
552	120	100	12	39.9999	1000.00	42.56	25	120	120	108	40	125	8	40	39	58	38	125.0	750.0	19.7	0.046

端面齿距Pe=模数×π　Fp=总齿距误差

技术要求
精度等级:DIN6 国际5级
材　　料:S45C/20CrMnTi
齿　　型:斜齿
右旋角：19° 31’ 42’ ’
硬度处理:高频淬火 HRC50-55°/渗碳淬火HRC55-60°
生产工艺:硬齿面处理后四面平磨，齿面研磨

亦供应无钻孔的齿条，请于型号后备注"N"，如STOER010N。
不同尺寸与材质以可依照图面客制化。

此样本中的所有产品型号及参数如有变更恕不另行通告，订货前请于本公司联系确认。

Technical requirement
Accuracy level: DIN6 international 5 level.
Material: S45C/20CrMnTi
Tooth profile: helical teeth
Right angle: 19° 31’ 42’ ’
Hardness treatment: high frequency quenching HRC50-55°/ carburizing quenching HRC55-60°
Production process: four side grinding after hard tooth surface treatment, tooth surface grinding.

Racks without holes are also available. Note"N" in the end of code number.I.e. SOTER010N.Other Dimensions / Materials could be customized by drawings.

The content of this documentis subject to change without notice.Please contact us before ordering.

Tel: 0086-571-88842852 Fax: 0086-571-88844378 E-mail:oceanindustry@vip.163.com

HANGZHOU OCEAN INDUSTRY CO., LTD.

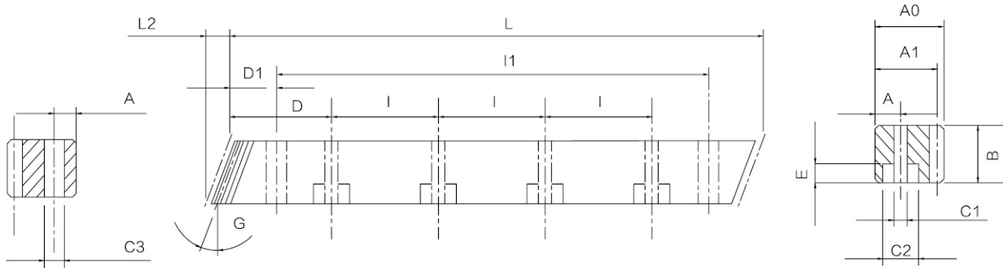

型号 Code			模数 Module	P_t	L	L2	齿数 Tooth No.	B	A0	A1	D	I	孔数 Hole No.	A	C1	C2	E	D1	I1	C3	Fp
662	010	050	1.5	4.9999	500.00	6	100	17	17	15.5	62.5	125	4	7	6	9.5	7	31.7	436.6	5.7	0.066
662	010	100	1.5	4.9999	1000.00	6	200	17	17	15.5	62.5	125	8	7	6	9.5	7	31.7	936.6	5.7	0.074
662	015	050	1.5	4.9999	500.00	6.03	100	19	19	17.5	62.5	125	4	8	7	11	7	31.7	436.6	5.7	0.066
662	015	100	1.5	4.9999	1000.00	6.74	200	19	19	17.5	62.5	125	8	8	7	11	7	31.7	936.6	5.7	0.074
662	020	050	2	6.6666	500.00	8.5	75	24	24	22	62.5	125	4	8	7	11	7	31.7	436.6	5.7	0.066
662	020	100	2	6.6666	1000.00	8.5	150	24	24	22	62.5	125	8	8	7	11	7	31.7	936.6	5.7	0.074
662	030	050	3	9.9999	500.00	10.3	50	29	29	26	62.5	125	4	9	10	15	9	35.0	430.0	7.7	0.066
662	030	100	3	9.9999	1000.00	10.3	100	29	29	26	62.5	125	8	9	10	15	9	35.0	930.0	7.7	0.072
662	040	050	4	13.3333	506.67	13.8	38	39	39	35	62.5	125	4	12	10	15	9	33.3	433.0	7.7	0.072
662	040	100	4	13.3333	1000.00	13.8	75	39	39	35	62.5	125	8	12	10	15	9	33.3	933.4	7.7	0.078
662	050	050	5	16.6666	500.00	17.4	30	49	39	34	62.5	125	4	12	14	20	13	37.5	425.0	11.7	0.072
662	050	100	5	16.6666	1000.00	17.4	60	49	39	34	62.5	125	8	12	14	20	13	37.5	925.0	11.7	0.078
662	060	050	6	19.9999	500.00	20.9	25	59	49	43	62.5	125	4	16	18	26	17	37.5	425.0	15.7	0.072
662	060	100	6	19.9999	1000.00	20.9	50	59	49	43	62.5	125	8	16	18	26	17	37.5	925.0	15.7	0.078
662	080	050	8	26.6667	480.00	28.0	18	79	79	71	60.0	120	4	25	22	33	21	120	240.0	19.7	0.08
662	080	100	8	26.6667	960.00	28.0	36	79	79	71	60.0	120	8	25	22	33	21	120	720.0	19.7	0.085
662	100	050	10	33.3333	1000.00	35.11	30	99	99	89	62.5	125	8	32	33	48	32	125	750.0	19.7	0.09
662	120	100	12	39.9999	1000.00	42.56	25	120	120	108	40	125	8	40	39	58	38	125	750.0	19.7	0.09

端面齿距Pe=模数×π/COS(19° 31′ 42′′)Fp=总齿距误差

技术要求
精度等级:DIN8 国际7级
材　　料:S45C
齿　　型:斜齿
右 旋 角:19° 31′ 42′′
硬度处理:调质处理HB20-25°
生产工艺:四面平磨精插

亦供应无钻孔的齿条，请于型号后备注"N"，如STOER010N。
不同尺寸与材质以可依照图面客制化。

此样本中的所有产品型号及参数如有变更恕不另行通告，订货前请于本公司联系确认。

Technical requirement
Accuracy level: DIN8 international 7 level.
Material: S45C
Tooth profile: helical teeth
Right angle: 19° 31′ 42′′
Hardness treatment: quenching and tempering treatment HB20-25°
Production process: four sides flat grinding and fine cutting

Racks without holes are also available. Note"N" in the end of code number.I.e. SOTER010N.Other Dimensions / Materials could be customized by drawings.

The content of this documentis subject to change without notice.Please contact us before ordering.

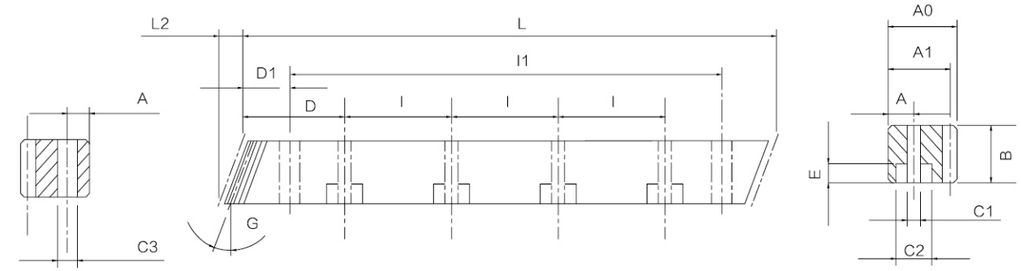

型号 Code			模数 Module	P_t	L	L2	齿数 Tooth No.	B	A0	A1	D	I	孔数 Hole No.	A	C1	C2	E	D1	I1	C3	Fp
772	010	050	1.5	4.9999	500.00	6	100	17	17	15.5	62.5	125	4	7	6	9.5	7	31.7	436.6	5.7	0.08
772	010	100	1.5	4.9999	1000.00	6	200	17	17	15.5	62.5	125	8	7	6	9.5	7	31.7	936.6	5.7	0.09
772	015	050	1.5	4.9999	500.00	6.03	100	19	19	17.5	62.5	125	4	8	7	11	7	31.7	436.6	5.7	0.08
772	015	100	1.5	4.9999	1000.00	6.74	200	19	19	17.5	62.5	125	8	8	7	11	7	31.7	936.6	5.7	0.09
772	020	050	2	6.6666	500.00	8.5	75	24	24	22	62.5	125	4	8	7	11	7	31.7	436.6	5.7	0.08
772	020	100	2	6.6666	1000.00	8.5	150	24	24	22	62.5	125	8	8	7	11	7	31.7	936.6	5.7	0.09
772	030	050	3	9.9999	500.00	10.3	50	29	29	26	62.5	125	4	9	10	15	9	35.0	430.0	7.7	0.088
772	030	100	3	9.9999	1000.00	10.3	100	29	29	26	62.5	125	8	9	10	15	9	35.0	930.0	7.7	0.101
772	040	050	4	13.3333	506.67	13.8	38	39	39	35	62.5	125	4	12	10	15	9	33.3	433.0	7.7	0.095
772	040	100	4	13.3333	1000.00	13.8	75	39	39	35	62.5	125	8	12	10	15	9	33.3	933.4	7.7	0.109
772	050	050	5	16.6666	500.00	17.4	30	49	39	34	62.5	125	4	12	14	20	13	37.5	425.0	11.7	0.095
772	050	100	5	16.6666	1000.00	17.4	60	49	39	34	62.5	125	8	12	14	20	13	37.5	925.0	11.7	0.109
772	060	050	6	19.9999	500.00	20.9	25	59	49	43	62.5	125	4	16	18	26	17	37.5	425.0	15.7	0.095
772	060	100	6	19.9999	1000.00	20.9	50	59	49	43	62.5	125	8	16	18	26	17	37.5	925.0	15.7	0.109
772	080	050	8	26.6667	480.00	28.0	18	79	79	71	60.0	120	4	25	22	33	21	120	240.0	19.7	0.1
772	080	100	8	26.6667	960.00	28.0	36	79	79	71	60.0	120	8	25	22	33	21	120	720.0	19.7	0.11
772	100	050	10	33.3333	1000.00	35.11	30	99	99	89	62.5	125	8	32	33	48	32	125	750.0	19.7	0.12
772	120	100	12	39.9999	1000.00	42.56	25	120	120	108	40	125	8	40	39	58	38	125	750.0	19.7	0.12

端面齿距Pe=模数×π/COS(19° 31′ 42′′)Fp=总齿距误差

技术要求
精度等级:DIN8 国际7级
材　　料:S45C
齿　　型:斜齿
右旋角:19° 31′ 42′′
硬度处理:高频淬火 HRC50-55°
生产工艺:四面平磨精插,表面发黑或磷化

亦供应无钻孔的齿条，请于型号后备注"N"，如STOER010N。
不同尺寸与材质以可依照图面客制化。

此样本中的所有产品型号及参数如有变更恕不另行通告，订货前请于本公司联系确认。

Technical requirement
Accuracy level: DIN8 international 7 level.
Material: S45C
Tooth profile: Oblique tooth
Right angle: 19° 31′ 42′′
Hardness treatment: high frequency quenching HRC50-55°
Production process: four sides flat grinding, fine insertion, surface blackening or phosphating.

Racks without holes are also available. Note"N" in the end of code number.I.e. SOTER010N.Other Dimensions / Materials could be customized by drawings.

The content of this documentis subject to change without notice.Please contact us before ordering.

Tel: 0086-571-88842852 Fax: 0086-571-88844378 E-mail:oceanindustry@vip.163.com

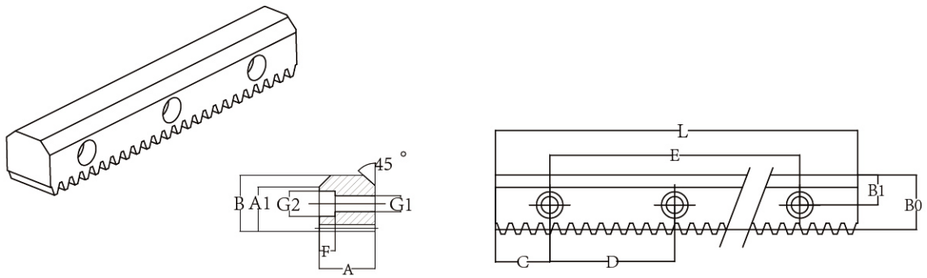

型号 Code	模数 Module	P_t	L	A	B	B0	C	D	B1	A1	G1	G2	F	E
VX55315063	1.5915	5	630	14.5	24.5	22.9	15	100	13	20	7	11	7	600
VX55315103	1.5915	5	1030	14.5	24.5	22.9	15	100	13	20	7	11	7	1000
VX55320063	1.5915	5	630	19.5	29.5	27.9	15	100	15.5	23.5	9	15	9	600
VX55320103	1.5915	5	1030	19.5	29.5	27.9	15	100	15.5	23.5	9	15	9	1000
VX55325063	2.3873	7.5	630	24.7	33	30.61	15	100	18.5	25.2	9	15	9	600
VX55325093	2.3873	7.5	930	24.7	33	30.61	15	100	18.5	25.2	9	15	9	900
VX55325123	2.3873	7.5	1230	24.7	33	30.61	15	100	18.5	25.2	9	15	9	1200
VX55335063	3.1831	10	630	34.6	46.6	43.41	15	100	28.6	36.7	11	18	11	600
VX55335093	3.1831	10	930	34.6	46.6	43.41	15	100	28.6	36.7	11	18	11	900
VX55335123	3.1831	10	1230	34.6	46.6	43.41	15	100	28.6	36.7	11	18	11	1200

总齿距误差/Total pitch error

GTF/1000≤0.036mm

直齿V型研磨导轨齿条

技术要求：

精度等级：DIN6e25

材料：S45C/20CrMnTi

齿型：直齿

硬度处理：高频淬火HRC50-55°/渗碳淬火HRC55-60°

生产工艺：四面研磨，齿面研磨，V型导轨面研磨

V型导轨硬度HRC50-55°/HRC55-60°

Straight tooth V type grinding guide rail rack

Technical requirements:

Accuracy level: DIN6e25

Material: S45C/20CrMnTi

Tooth type: straight tooth.

Hardness treatment: high frequency quenching HRC50-55° / carburizing quenching HRC55-60°

Production process: four sides grinding, tooth surface grinding, V rail surface grinding.V rail hardness HRC50-55° /HRC55-60°

此样本中的所有产品型号及参数如有变更恕不另行通告，订货前请于本公司联系确认。

The content of this documentis subject to change without notice.Please contact us before ordering.

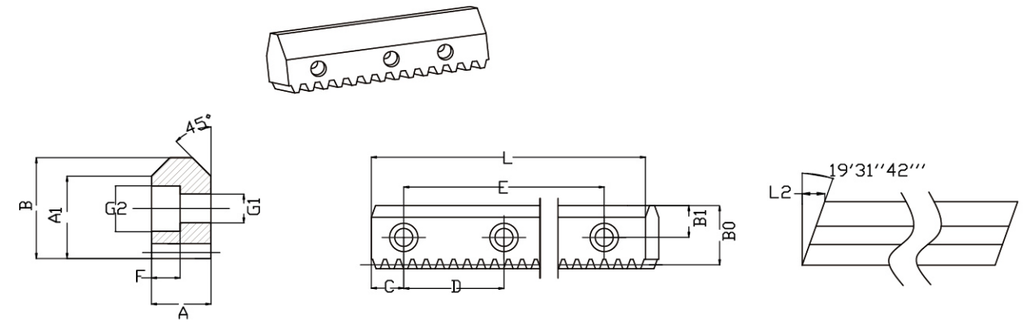

型号 Code	模数 Module	P_t	L	L2	A	B	B0	C	D	B1	A1	G1	G2	F	E
VXX66315063	1.5	4.9999	630	5.143	14.5	24.5	23	15	100	13	20	7	11	7	600
VXX66315103	1.5	4.9999	1030	5.143	14.5	24.5	23	15	100	13	20	7	11	7	1000
VXX66320063	1.5	4.9999	630	6.916	19.5	29.5	28	15	100	15.5	23.5	9	15	9	600
VXX66320103	1.5	4.9999	1030	6.916	19.5	29.5	28	15	100	15.5	23.5	9	15	9	1000
VXX66325064	2	6.6666	640	8.76	24.7	33	31	20	100	18.5	25.2	9	15	9	600
VXX66325094	2	6.6666	940	8.76	24.7	33	31	20	100	18.5	25.2	9	15	9	900
VXX66325124	2	6.6666	1240	8.76	24.7	33	31	20	100	18.5	25.2	9	15	9	1200
VXX66335063	3	9.9999	630	12.272	34.6	46.6	43.6	15	100	28.6	36.7	11	18	11	600
VXX66335093	3	9.9999	930	12.272	34.6	46.6	43.6	15	100	28.6	36.7	11	18	11	900
VXX66335123	3	9.9999	1230	12.272	34.6	46.6	43.6	15	100	28.6	36.7	11	18	11	1200

总齿距误差/Total pitch error

GTF/1000≤0.036mm

斜齿V型研磨导轨齿条

技术要求：

精度等级：DIN6e25

材料：S45C/20CrMnTi

齿型：斜齿

右旋角：19°31'42"

硬度处理：高频淬火HRC50-55°/渗碳淬火HRC55-60°

生产工艺：四面研磨，齿面研磨，V型导轨面研磨

V型导轨硬度HRC50-55°/HRC55-60°

Helical V type grinding guide rack

Technical requirements:

Accuracy level: DIN6e25

Material: S45C/20CrMnTi

Tooth profile: helical teeth

Right angle: 19° 31'42''

Hardness treatment: high frequency quenching HRC50-55° / carburizing quenching HRC55-60°

Production process: four sides grinding, tooth surface grinding, V rail surface grinding. V rail hardness HRC50-55° /HRC55-60°

此样本中的所有产品型号及参数如有变更恕不另行通告，订货前请于本公司联系确认。

The content of this documentis subject to change without notice.Please contact us before ordering.

Tel: 0086-571-88842852 Fax: 0086-571-88844378 E-mail:oceanindustry@vip.163.com

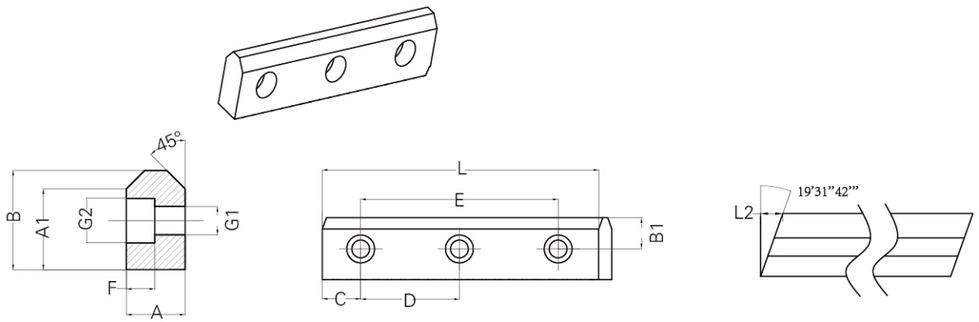

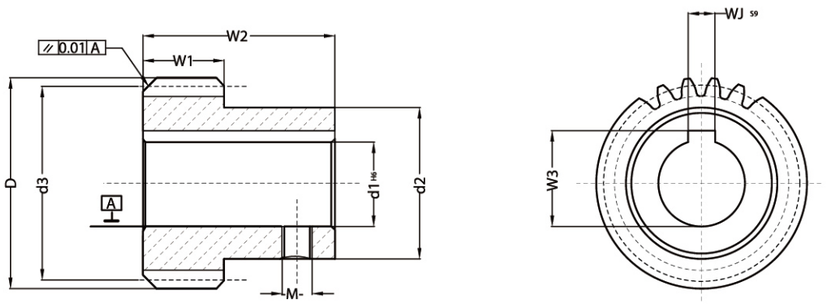

型号 Code	L	L2	A	B	C	D	B1	A1	G1	G2	F	E
VXT77315063	630	5.143	14.5	24.5	15	100	13	20	7	11	7	600
VXT77315103	1030	5.143	14.5	24.5	15	100	13	20	7	11	7	1000
VXT77320063	630	6.916	19.5	29.5	15	100	15.5	23.5	9	15	9	600
VXT77320103	1030	6.916	19.5	29.5	15	100	15.5	23.5	9	15	9	1000
VXT77325063	630	8.76	24.7	33	15	100	18.5	25.2	9	15	9	600
VXT77325093	930	8.76	24.7	33	15	100	18.5	25.2	9	15	9	900
VXT77325123	1230	8.76	24.7	33	15	100	18.5	25.2	9	15	9	1200
VXT77325063	630	12.272	34.6	46.6	15	100	28.6	36.7	11	18	11	600
VXT77335093	930	12.272	34.6	46.6	15	100	28.6	36.7	11	18	11	900
VXT77335123	1230	12.272	34.6	46.6	15	100	28.6	36.7	11	18	11	1200

型号 Code	模数 Module	齿数	d1H6	d2	d3	D	w1	w2	w3	WJS9	M
YMCL151433	1.5	25	14	Φ26	Φ39.97	Φ42.97	19	33	16.3	5	4
YMCL151635	1.5	24	16	Φ28	Φ38.20	Φ41.20	15	35.5	18.3	5	6
YMCL151935	1.5	24	19	Φ28	Φ38.20	Φ41.20	15	35.5	21.8	6	6
YMCL152043	1.5	26	20	Φ32	Φ41.38	Φ44.38	22	43	22.8	6	6
YMCL152045	1.5	30	20	Φ38	Φ47.74	Φ50.74	25	45	22.8	6	6
YMCL152055	1.5	30	20	Φ38	Φ47.74	Φ50.74	25	55	22.8	6	6
YMCL152065	1.5	30	20	Φ38	Φ47.74	Φ50.74	25	65	22.8	6	6
YMCL152265	1.5	30	22	Φ38	Φ47.74	Φ50.74	25	65	24.8	6	6
YMCL152555	1.5	30	25	Φ38	Φ47.74	Φ50.74	25	55	27.8	6	6

V型研磨导轨

技术要求

材　　料:S45C/20CrMnTi

硬度处理:V型导轨面硬度50-60HRC/HRC55-60°

生产工艺:四面研磨，V型导轨面研磨

V grinding Guide

Technical requirement

Material: S45C/20CrMnTi

Hardness: V rail surface hardness 50-60°HRC/HRC55-60°

Production process: four side grinding, V rail surface grinding

斜齿研磨齿轮

技术要求

精度等级:DIN6　国际5级

材　　料:40Cr/20CrMnTi

齿　　型:斜齿

左旋角:19° 31′ 42′′

硬度处理:高频淬火 HRC50-55°/整体渗碳淬火HRC55-60°

生产工艺:齿面研磨

Helical gear grinding

Technical requirement

Accuracy level: DIN6 international 5 level.

Material: 40Cr/20CrMnTi

Tooth profile: helical teeth

Left angle: 19° 31'42''

Hardness treatment: high frequency quenching HRC50-55° / whole carburizing quenching HRC55-60°

Production process: gear grinding

此样本中的所有产品型号及参数如有变更恕不另行通告，订货前请于本公司联系确认。

The content of this documentis subject to change without notice.Please contact us before ordering.

此样本中的所有产品型号及参数如有变更恕不另行通告，订货前请于本公司联系确认。

The content of this documentis subject to change without notice.Please contact us before ordering.

Tel: 0086-571-88842852 Fax: 0086-571-88844378 E-mail:oceanindustry@vip.163.com

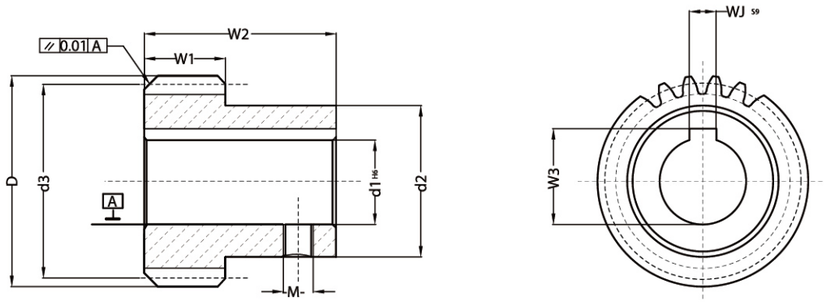

型号 Code	模数 Module	齿数	d1H6	d2	d3	D	w1	w2	w3	WJS9	M
YMCL201438	2	21	14	Φ30	Φ44.56	Φ48.56	20	38	16.3	5	6
YMCL201936	2	25	19	Φ35	Φ53.05	Φ57.05	21	36	21.8	6	6
YMCL202034	2	21	20	Φ36	Φ44.56	Φ48.56	20	34	22.8	6	5
YMCL202058	2	25	20	Φ45	Φ53.29	Φ57.29	25	58	22.8	6	6
YMCL202054	2	27	20	Φ40	Φ57.29	Φ61.29	25	54	22.8	6	6
YMCL202242	2	20	22	Φ35	Φ46.44	Φ42.44	24	42	24.8	6	6
YMCL202250	2	25	22	Φ40	Φ57.29	Φ53.29	25	50	24.8	6	6
YMCL202243	2	30	22	Φ50	Φ63.66	Φ67.66	28	43	24.8	6	6
YMCL202250	2	30	22	Φ50	Φ63.66	Φ67.66	28	50	24.8	6	6
YMCL202555	2	30	25	Φ45	Φ63.66	Φ67.66	25	55	27.8	8	6
YMCL203255	2	32	32	Φ50	Φ67.9	Φ71.9	24	55	35.3	10	8
YMCL203258	2	36	32	Φ50	Φ76.39	Φ80.39	24	58	35.3	10	8

斜齿研磨齿轮

技术要求

精度等级:DIN6　国际5级

材　料:40Cr/20CrMnTi

齿　型:斜齿

左旋角：19° 31′ 42′′

硬度处理:高频淬火 HRC50-55°/整体渗碳淬火HRC55-60°

生产工艺:齿面研磨

Helical gear grinding

Technical requirement

Accuracy level: DIN6 international 5 level.

Material: 40Cr/20CrMnTi

Tooth profile: helical teeth

Left angle: 19° 31'42''

Hardness treatment: high frequency quenching HRC50-55° / whole carburizing quenching HRC55-60°

Production process: gear grinding

此样本中的所有产品型号及参数如有变更恕不另行通告，订货前请于本公司联系确认。

The content of this documentis subject to change without notice.Please contact us before ordering.

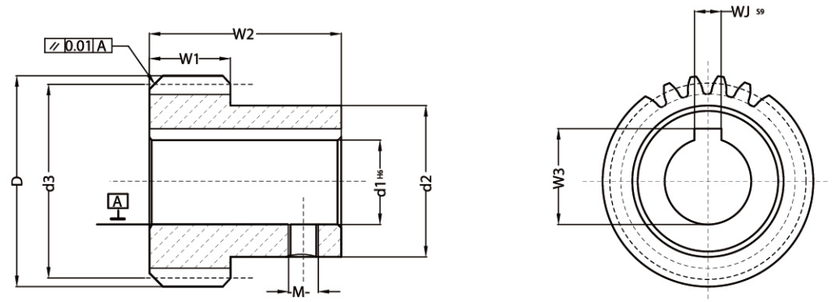

型号 Code	模数 Module	齿数	d1H6	d2	d3	D	w1	w2	w3	WJS9	M
YMCL302555	3	20	25	Φ50	Φ63.66	Φ69.66	30	55	28.3	8	8
YMCL302580	3	20	25	Φ50	Φ63.66	Φ69.66	30	80	28.3	8	8
YMCL303260	3	20	32	Φ55	Φ63.66	Φ69.66	28	60	35.3	10	8
YMCL303255	3	25	32	Φ66	Φ79.57	Φ85.57	30	55	35.3	10	8
YMCL303565	3	25	35	Φ55	Φ79.57	Φ85.57	28	65	38.8	10	8
YMCL304080	3	25	40	Φ70	Φ79.58	Φ85.58	39	80	43.3	12	12
YMCL404550	4	22	45	Φ65	Φ93.37	Φ101.4	40	50	38.3	10	8
YMCL403575	4	24	35	Φ55	Φ101.86	Φ109.9	40	75	38.3	10	8
YMCL404075	4	24	40	Φ62	Φ101.86	Φ109.9	40	75	43.3	12	10
YMCL404080	4	25	40	Φ80	Φ106.103	Φ114.103	42	80	43.3	12	10

斜齿研磨齿轮

技术要求

精度等级:DIN6　国际5级

材　料:40Cr/20CrMnTi

齿　型:斜齿

左旋角：19° 31′ 42′′

硬度处理:高频淬火 HRC50-55°/整体渗碳淬火HRC55-60°

生产工艺:齿面研磨

Helical gear grinding

Technical requirement

Accuracy level: DIN6 international 5 level.

Material: 40Cr/20CrMnTi

Tooth profile: helical teeth

Left angle: 19° 31'42''

Hardness treatment: high frequency quenching HRC50-55° / whole carburizing quenching HRC55-60°

Production process: gear grinding

此样本中的所有产品型号及参数如有变更恕不另行通告，订货前请于本公司联系确认。

The content of this documentis subject to change without notice.Please contact us before ordering.

Tel: 0086-571-88842852 Fax: 0086-571-88844378 E-mail:oceanindustry@vip.163.com

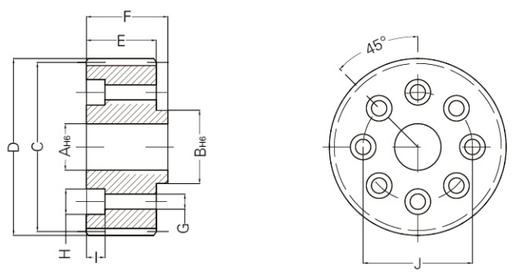

型号 Code	模数 Module	齿数	AH6	BH6	C	D	E	F	G	H	I	J
YMCLK26	2	26	15	20	55.174	60.80	26	29.0	5.5	10	12	31.5
YMCLK27	2	27	15	20	57.296	61.296	30	33.5	5.5	10	11	31.5
YMCLK29	2	29	15	20	61.540	67.20	26	29.0	5.5	10	12	31.5
YMCLK35	2	35	15	20	74.272	79.800	26	29.0	5.5	10	12	31.5
YMCLK29-20	2	29	20	25	61.540	67.200	26	30.0	6.6	11	14	40
YMCLK33	2	33	20	31.5	70.028	75.599	26	30.0	6.6	11	14	50
YMCLK36	2	36	20	31.5	76.394	80.394	30	34.0	6.6	11	8	50
YMCLK37	2	37	20	31.5	78.517	84.200	26	30.0	6.6	11	14	50

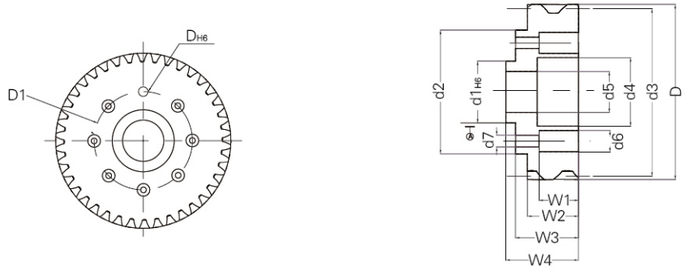

型号 Code	模数 Module	齿数	d1H6	d2	d3	d4	d5	d6	d7	w1	w2	w3	W4	DH6	D1
YMCL37	2	37	31.500	63	78.52	35	20	1.1	6.6	14	24	34	40	6	50
YMCL40	2	40	31.500	63	84.88	35	21	1.1	6.4	14	26	31	37	6	50

斜齿法兰研磨齿轮

技术要求

精度等级:DIN6　　国际5级

材　　料:20CrMnTi

齿　　型:斜齿

左旋角：19° 31’ 42’’

硬度处理:整体渗碳HRC55-60°

生产工艺:齿面研磨

Helical gear grinding gear

Technical requirement

Accuracy level: DIN6 international 5 level.

Material: 20CrMnTi

Tooth profile: helical teeth

Left angle: 19° 31’42’’

Hardness treatment: overall carburizing HRC55-60°

Production process: gear grinding

此样本中的所有产品型号及参数如有变更恕不另行通告，订货前请于本公司联系确认。

The content of this documentis subject to change without notice.Please contact us before ordering.

Tel: 0086-571-88842852 Fax: 0086-571-88844378 E-mail:oceanindustry@vip.163.com